CONFORM TO RoHS INSTRUCTIONS

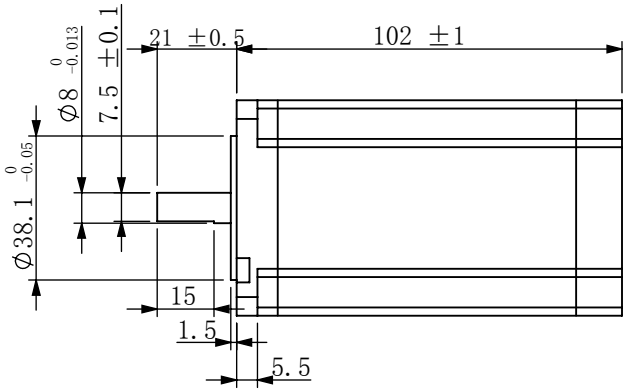

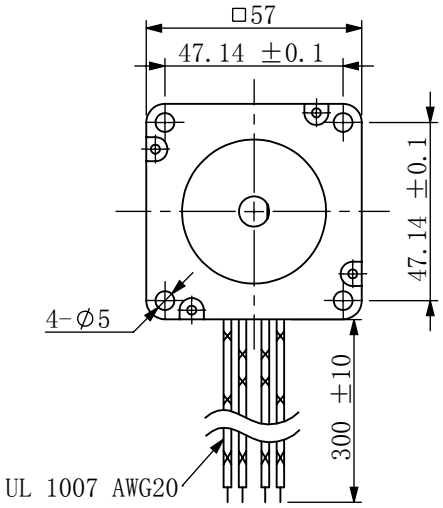

WIRING DIAGRAM

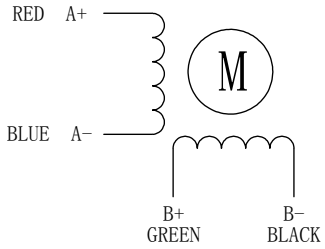

ELECTRICAL PARAMETER

STEP ANGLE	1.8° ±5%
NO. OF PHASES	2
RATED VOLTAGE	4.1V
RATED CURRENT	5.0A
RESISTANCE	0.82ohm±10% AT25℃
INDUCTANCE	3.73mH±20% AT 1kHz, 1Vrms
HOLDING TORQUE	3.0N.m
(AT —PPS) RUNNING TORQUE(AT —PPS)	——/MIN (——V.DC, ——A(PHASE), ——EX)
DIELECTRIC STRENTH	500V A.C 1分钟/MINUTE
INSULATION RESISTANCE	100MΩ以上/MIN.
INSULATION CLASS	CLASS B
TEMPERATURE RISE	80K MAX.
ROTOR INERTIA	720g.cm²
WEIGHT	APPROX. 1480g
ALLOWABLE THRUST LOAD	5N
ALLOWABLE RADIAL LOAD	25N(ON THE SHAFT END)
OPERATION AMBIENT TEMP.	-20℃——+50℃
OPERATION AMBIENT HUM.	15%——90%
LIFE	5000 HOURS

EXCITING SEQUENCE(TWO PHESES)
VS. DIRECTION OF ROTATION

CW

STEP	A+	B+	A-	B-
1	+	+	-	-
2	-	+	+	-
3	-	-	+	+
4	+	-	-	+

CCW

CLOCKWISE VIEW FROM MOUTING SIDE

NOTE):
1.AT RATED CURRENT,TWO PHASES ON.
2.MEASURED BY RESISTANCE METHOD. MOUNT WITH ALUMINUM HEAT SINK 84*84*T5 AT TWO WINDING BE EXCITED BY RATED VOLTAGE,0PPS,2PHASE ON.
3.LIFE TEST CONDITION:2PHASE EXCITING,FULL STEP,AT 500PPS. STARTING PULSE, BEARING TEMPERATURE SHOULD BE 70° C MAX.

CONFIRMED&ACCEPTED BY CUTOMER							
COMPANY CHOP&SIGNATURE							
TULERANCE ±0.3/±3°	REV.	DATE	ECR NO.	REVISIONS	BY	NOTE	

DESIGNED		SCALE		MODEL	THIRD ANGLE PROJECTION
CHECKED		UNIT	mm	M2574T030-8	
				SHEET	1/1